TTF2311008.1	2023.11.13

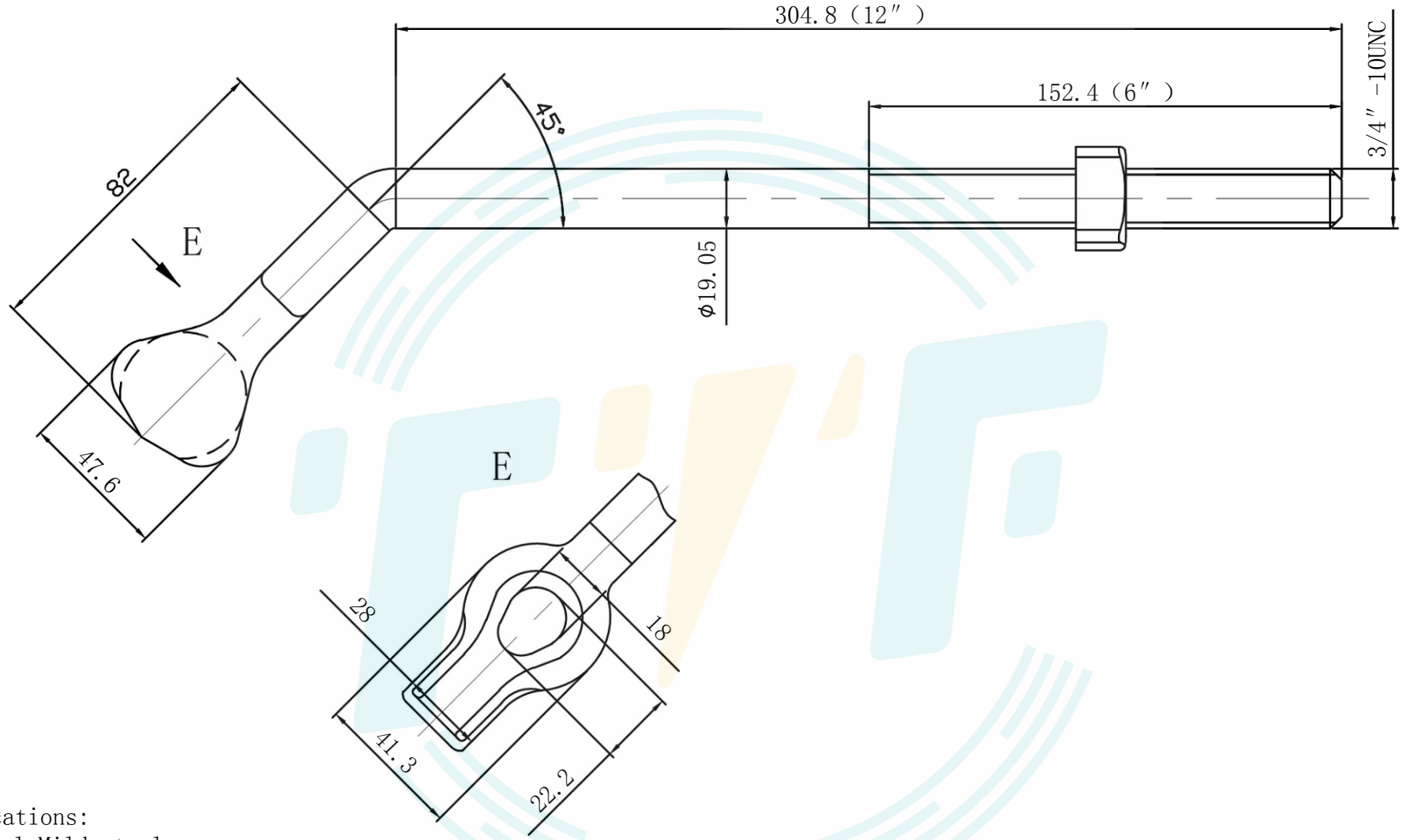

Specifications:
1. Material:Mild steel.
2. Finish: Hot dip galvanized to ASTM A153.
3. Tolerance:±5% for all dimensions unless otherwise specified.
4. Min tensile strength:20050 lbf.

Angle thimble eye bolt, 3/4” x 12”, HD.G					
制图 drawing	HAI YUE HE	审核 audit	JACK WU	批准 approval	XUE DONG JI

TTF POWER TECHNOLOGY CO.,LTD